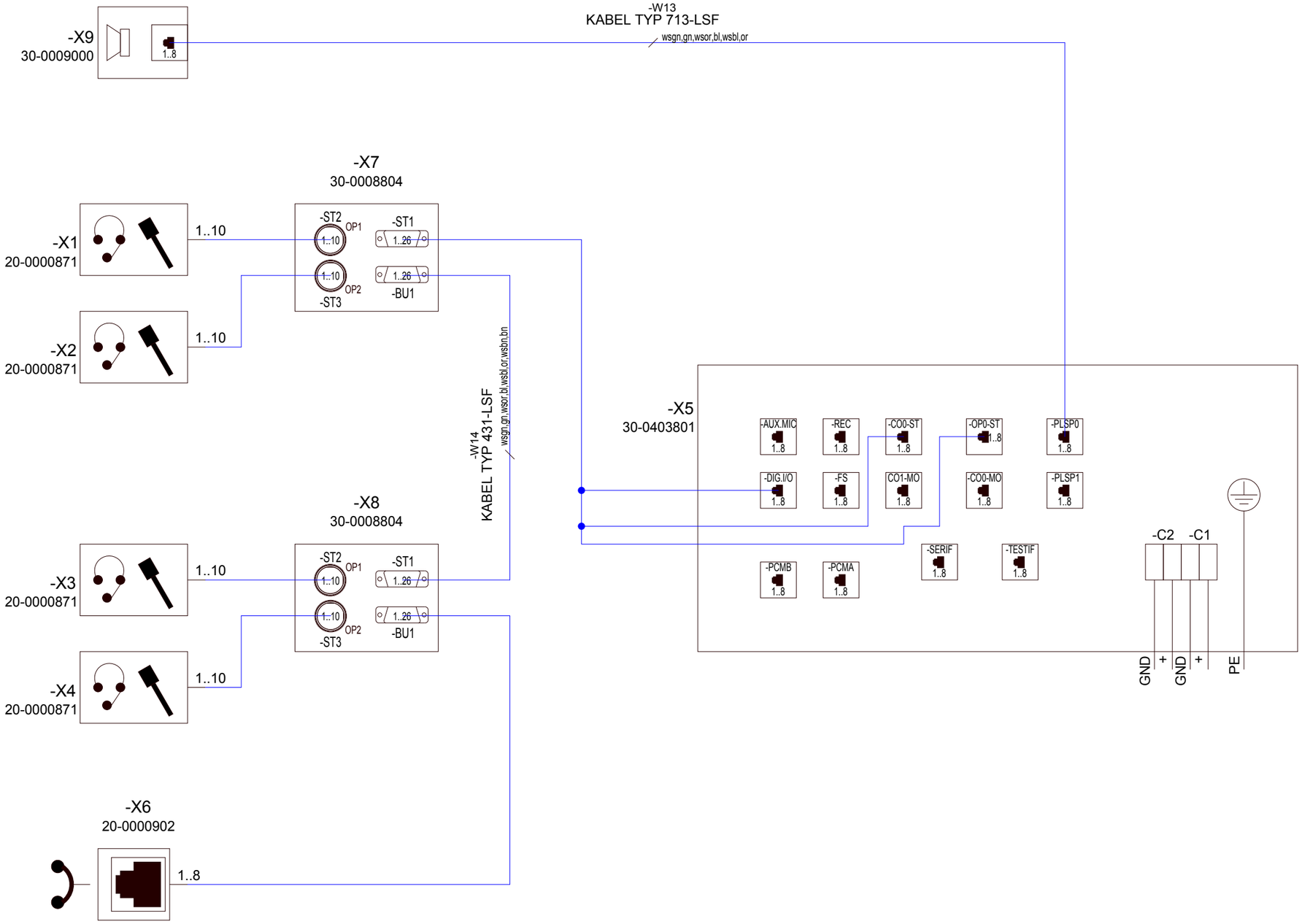

We reserve all rights in this document and in the information contained therein. Reproduction, use or disclosure to third parties without express authority is strictly forbidden.
© CIM-Team

created with E3 series

MECATI_EGYPT-TOWER
C:\CT\CopyTemplate_E3-Projekte\Customer-Projects\Frequentis\
01.04.2009
15.08.2008 18:53

				date				CIM-TEAM A ZUKEN COMPANY	Arbeitsplatz		
				User							+S1
				Proved							Sheet 6
Status	change	date	name	Standard		Origin	Repl. f.	Repl. by			9 Sh.