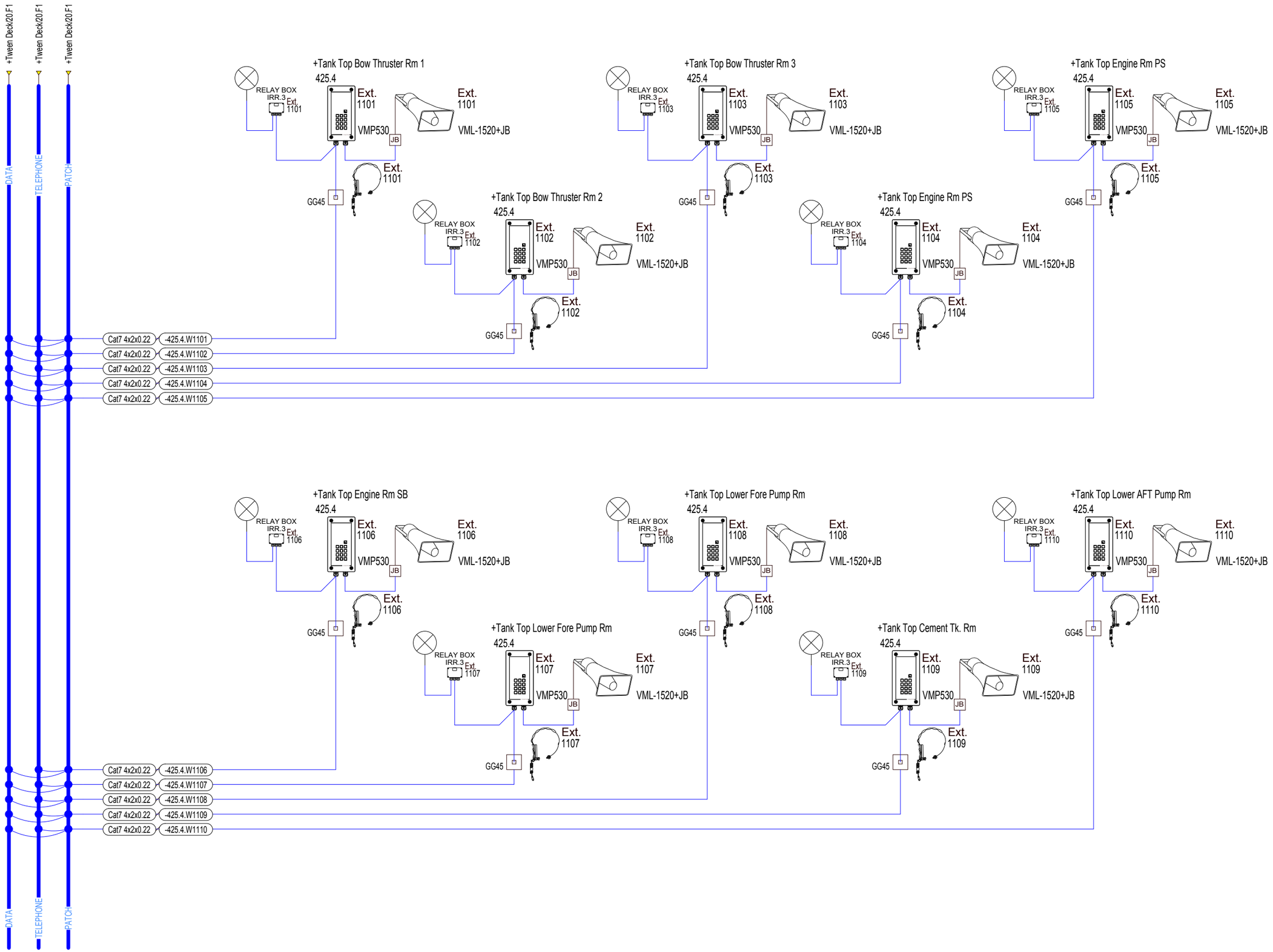

created with E3.series 091468 C:\Projects\Alfa\Drawings\ 30.03.2009 30.03.2009 12:25

We reserve all rights in this document and in the information contained therein. Reproduction, use or disclosure to third parties without express authority is strictly forbidden. © CIM-Team

				date				CIM-TEAM A ZUKEN COMPANY		425.4	
				User						+Rm 1	
				Proved							Sheet 21
Status	change	date	name	Standard		Origin	Repl. f.	Repl. by			246 Sh.